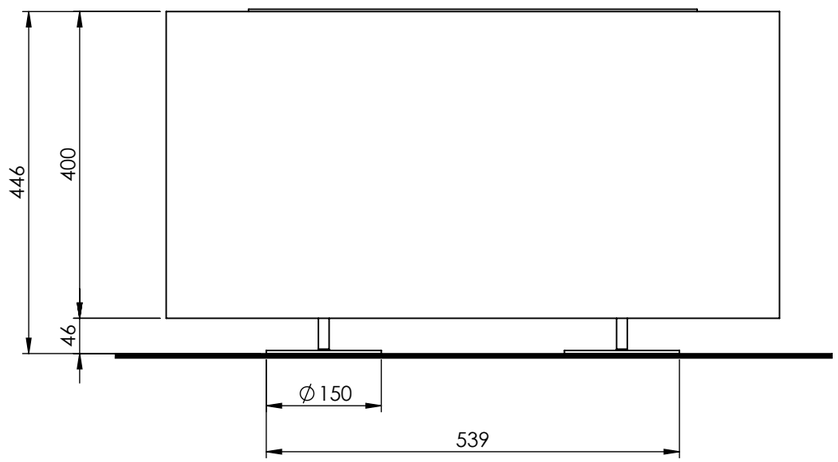

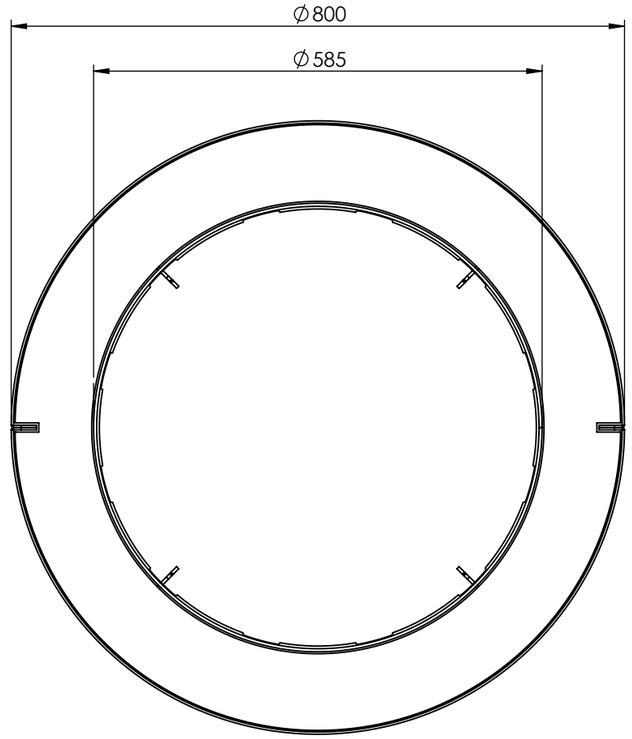

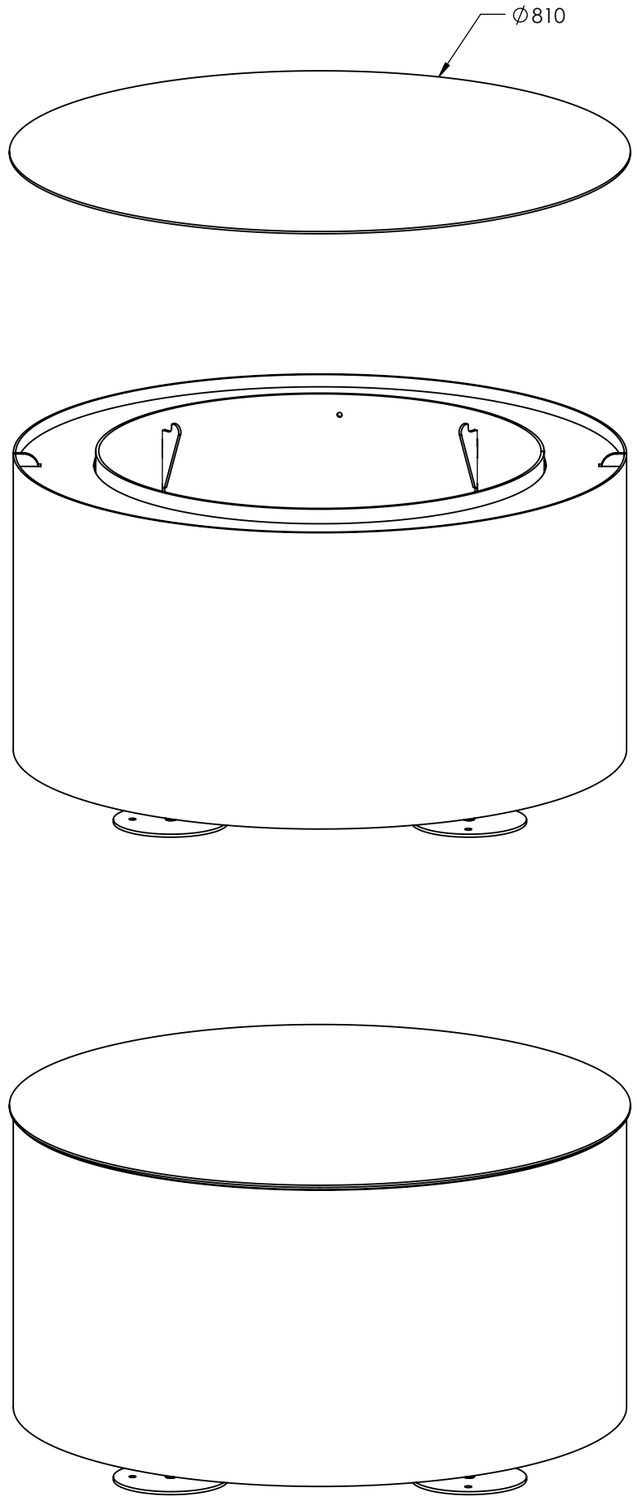

Ak-47 © All Rights Reserved